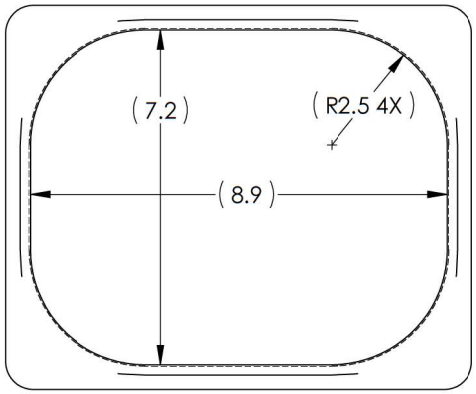

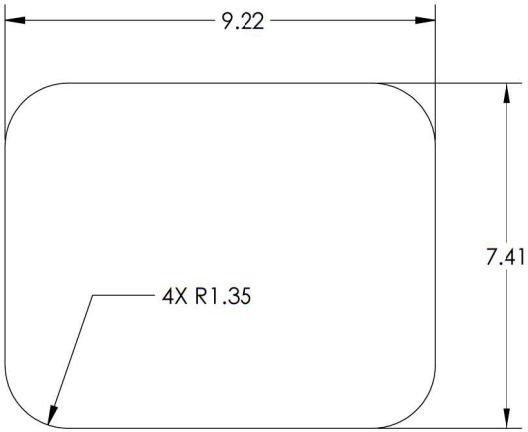

DEBRIS PAN OPENING

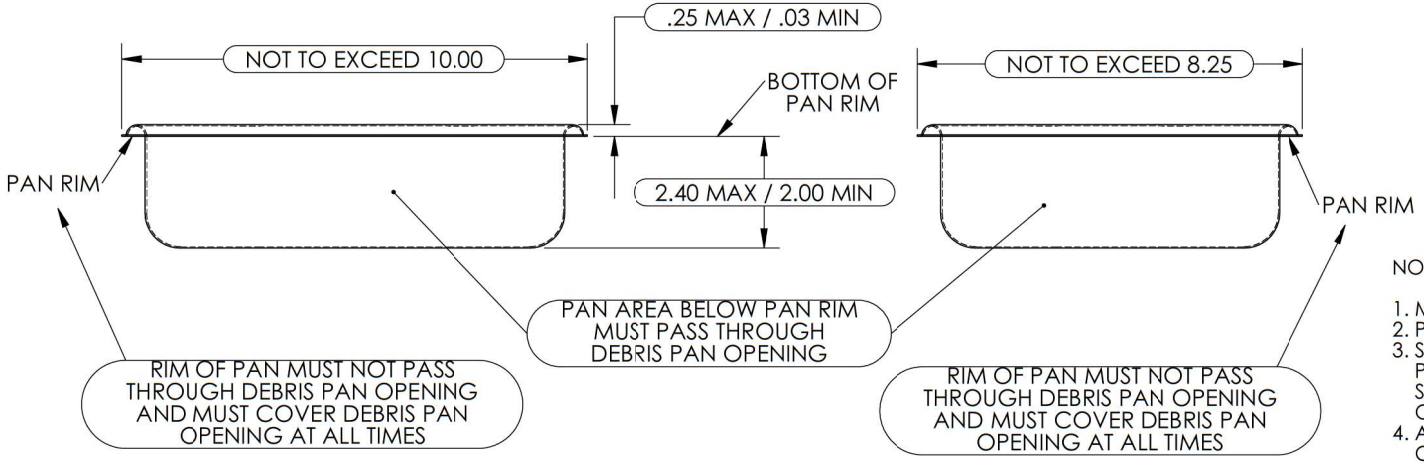

NOTES:

1. MATERIAL : STAINLESS STEEL
2. PART TO BE FREE OF BURRS AND SHARP EDGES.
3. SURFACE OF PART MUST BE CLEAN AND FREE OF POLISHING COMPOUND, DENTS, WRINKLES, SCRATCHES, PITTING, CORROSION, STAINING OR OTHER IMPERFECTIONS.
4. ALL MATERIALS TO BE REACH AND ROHS COMPLIANT PER DS30013.
5. ALL DIMENSIONS ARE IN INCHES

REV.	BY	DATE	ECN NO.	DESCRIPTION
A	MFH	3/11/2021	ECN21-018	UPDATED DIMENSIONING AND NOTES TO PART REQUIREMENTS
--	CDS	06-23-03	ER558	PRODUCTION RELEASE, WAS PT-470

REVISIONS

TOLERANCE UNLESS SPECIFIED (COML STK. SIZES EXCLUDED)
FRAC. = ± 1/32
DEC. .X = ±.060 ±[1.52]
.XX = ±.030 ±[0.76]
.XXX = ±.010 ±[0.25]
ANG. = ±1.0°

MATERIAL: SEE NOTES			FINISH: SEE NOTES
DR BY: CDS	DATE: 06-26-03	SHEET: 1 OF 1	NAME: DEBRIS PAN
CHK BY: ___	DATE: ___	SCALE: 3:8	SIZE: B · DO NOT SCALE DRAWING · NUMBER: 99216 · REV: A
APP'D BY: ___	DATE: ___	CALC. WT.	